Apartment Block #1

PDF Paper Model Kit

Jerry Jensen
Modeling basics text

Dave Graffam
Artwork, layout

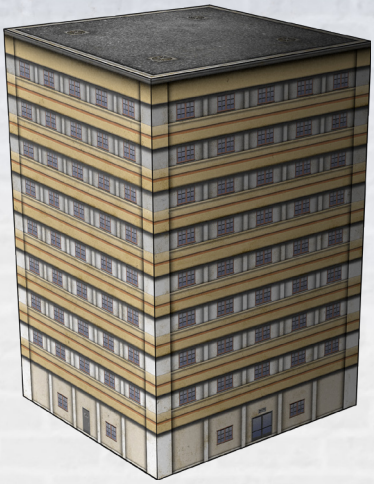

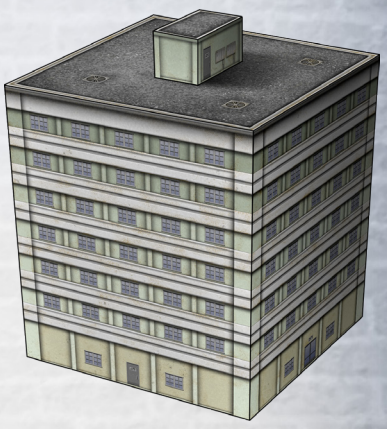

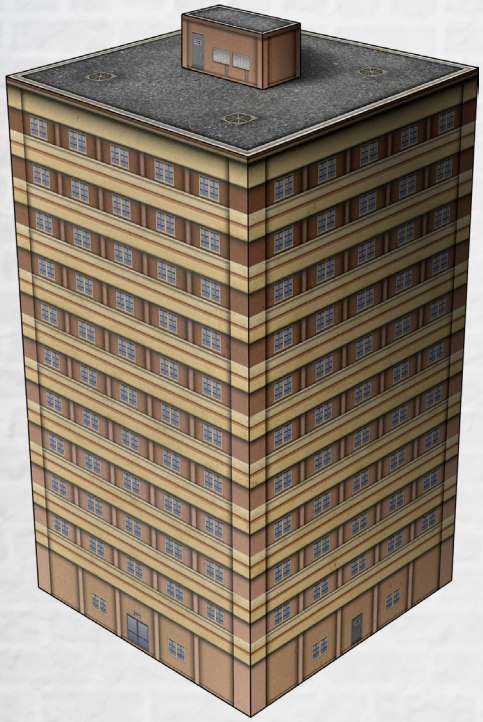

PRINTING TIPS

These PDF files are set up for the 6mm tabletop wargaming scale, and for US letter-sized (8.5" x 11") sheets, but should print just fine on A4-sized sheets. Turn off any 'fit to page' options in your printer driver.

GLUE AND PAPER TIPS

To get the best results, experiment with different papers and glues. Take advantage of the brightest and sharpest printing methods you have available. I prefer laser color copies printed on 110# (199 gsm) matte cardstock.

The best choice of paper and glue will depend a lot on the printing method that you choose. I use a low-moisture, tacky glue such as Aleene's Original Tacky Glue. Small dabs of ordinary white school glue usually does the trick.

When applying glue, a thin and even coat is much better than a heavy glob. Cut up excess cardstock into little squares and keep these handy so that you can spread out glue onto tabs. It's a good idea to keep some slightly-damp tissue if you need to wipe up extra glue, but be careful about this if you're using ink-based prints.

MULTI-LAYERED PDFs

The PDF files included in this kit feature multiple graphics layers that you can mix-and-match in lots of ways, letting you customize the look of your model before printing.

To access the layers palette, open up the PDF in Adobe Acrobat Reader. If the layers palette is not already in view, do a search for "Navigation > Layers" and it should appear. Open the layers palette (click the "plus" sign) and you'll see the names of all of the available graphics. Some layers are locked by default, so you won't be able to adjust those.

Be sure to explore the layer options, turning each layer on and off to see what happens. Make notes about your favorites. Some configuration options may require you to choose the same option on different pages, so look out for that.

When you're happy with your layer selections, print your pages and start assembling. Of course this means that you can print the same model several times, choosing a different look each time. It's many models in one!

EXPERT ADVICE

Don't miss the **Paper Modeling Guide** available from **DavesGames.net**. It's loaded with tips and tricks to help you avoid mistakes and assemble a great-looking finished model.

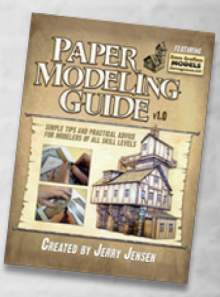

Dave Graffam MODELS

DavesGames.Net

David Graffam © 2015

TOOLS

You'll need a few basic craft supplies to create this model.

- ***Scissors:*** Scotch makes good scissors designed for cutting thick paper, but almost any pair of scissors will do.
- ***Hobby knife:*** X-Acto is my favorite brand. Extra blades are recommended. Replace the blade often.
- ***Metal ruler:*** A 12" or 18" metal ruler with non-slip cork backing is good for general use. A 6" ruler will be convenient for cutting smaller sections.
- ***Cutting mat:*** A 12" x 18" self-healing vinyl cutting mat is the ideal cutting surface.
- ***Glue:*** I prefer Aleene's Original Tacky Glue or Aleene's Fast Grab Glue. You may also use Elmer's white school glue, PVC glue, or similar products.

Optionally, you may also want to acquire foamcore, a glue stick, and spray glue, although these are not necessary.



PREPARATION

Read through these instructions at least once before printing and assembling your model to help avoid any mistakes or confusion later.

When you're ready to assemble the model, print each page onto cardstock paper. 110 pound/299gsm cardstock paper is recommended, but you may print on somewhat thinner cardstock if you prefer.

Cutting: Always cut carefully and slowly. Children should never use sharp tools unsupervised. After printing your pages, cut out all of the components, cutting along their black outer lines and scoring along the remaining inner black lines. Do not cut or score any of the gray lines. When cutting, you may use scissors if you are able to cut very straight. For long lines, or difficult-to-reach areas, or if you are not confident cutting with scissors, you should use your hobby knife and a cork-backed metal ruler as a guide.

Scoring: To score a line, lightly drag the tip (or even the *back* of the tip) of your hobby knife along that line. For best results, use a cork-backed metal ruler as a guide.

Pre-fitting: After cutting and scoring each component, "crack" them along their score lines and fold them slightly in the proper direction. Whenever possible, press against a flat surface such as your cutting mat to easily and cleanly fold each segment. This step will let you know if you have forgotten to score any lines, and you may correct this now.

Edging: Optionally, you may use a fine-line marker to darken the white edges of the components. This will greatly improve the overall appearance of your final model. Black markers will work well for most components, but you may experiment with other marker colors for even better results.

Paper Scraps: Rather than discarding all of your unused pieces, cut these into triangles or squares about 1 inch across. These can be useful for spreading glue evenly on tabs, by using the flat sides of the paper scraps as a trowel. And they can be used to put small amounts of glue where you want them, by placing a dot of glue on the corners of a paper scrap.

STORE FLAT VERSION

Cut out the two pieces forming the main structure along their outer black lines. Cut out the slots for the Rooftop Access (if used), then score along the remaining black lines (1, 2).

Affix the two pieces as shown, forming a single piece (3).

Affix the remaining side-tab to the other side, forming a boxy tube (4).

Stand up the model and slide the tabs along the roofline into the slots along the top of the walls (5).

If using the Rooftop Access, cut out that piece along its outer black lines, then score along the remaining lines (6).

Affix the tab along the side to the other side, forming a boxy shape (7).

Affix the roof to the tabs along the tops of the walls (8).

Slide the assembled Rooftop Access into the slots on the roof of the main structure (9).

For storage, simply remove the Rooftop Access, slide the tabs along the roofline out of their slots and press the main structure flat.

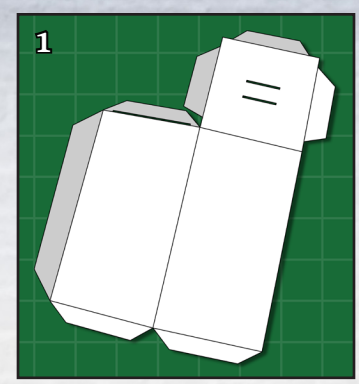

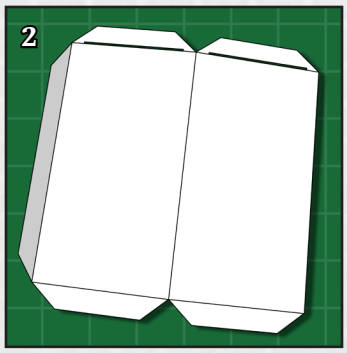

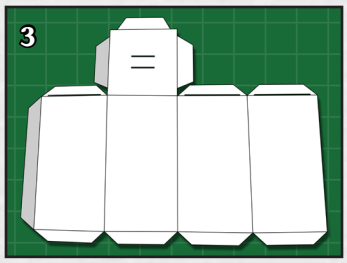

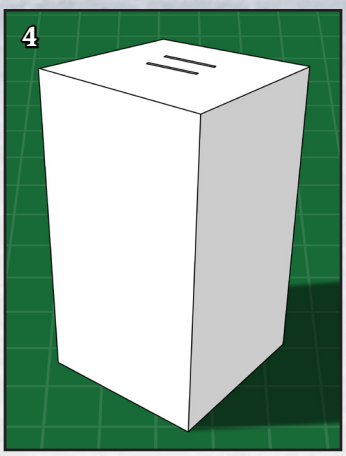

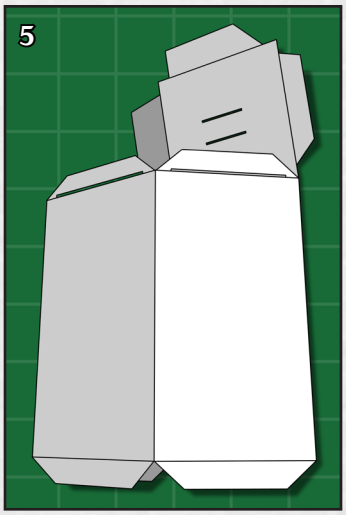

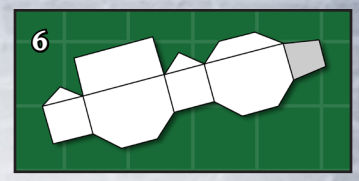

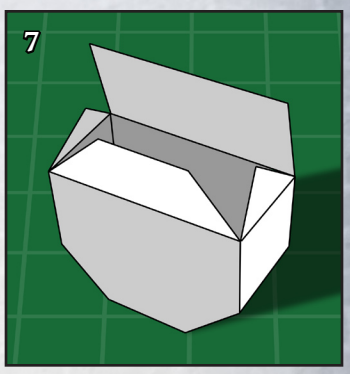

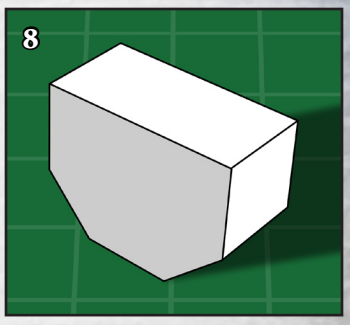

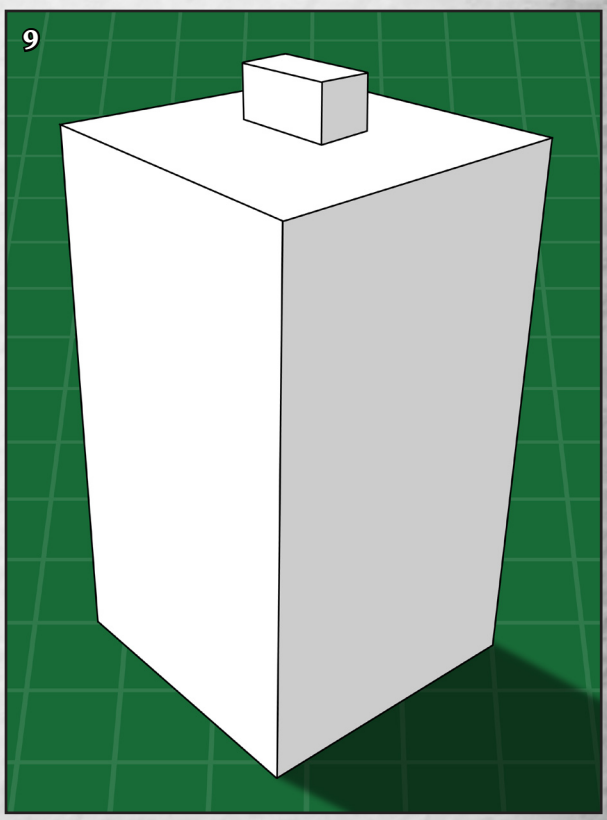

PERMANENT BUILD VERSION

Cut out the two pieces forming the main structure along their outer black lines, then score along the remaining black lines (1, 2).

Affix the two pieces as shown, forming a single piece (3).

Affix the remaining side-tab to the other side, forming a boxy tube (4).

Affix the roof to the tabs along the tops of the walls, then stand up the model (5).

If using the Rooftop Access, cut out that piece along its outer black lines, then score along the remaining lines (6).

Affix the tab along the side to the other side, forming a boxy shape (7).

Affix the roof to the tabs along the tops of the walls (8).

Affix the assembled Rooftop Access to the position indicated on the roof (9).

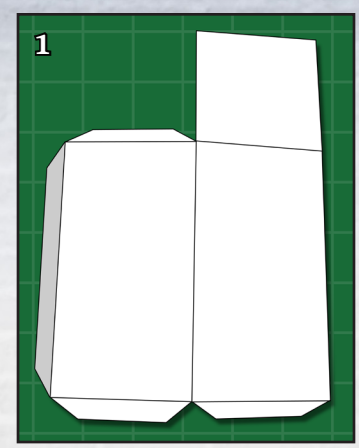

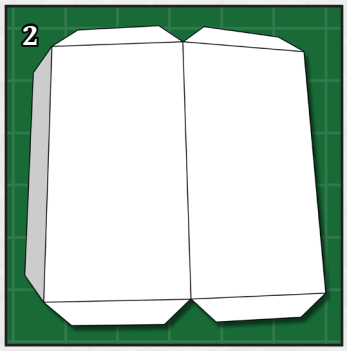

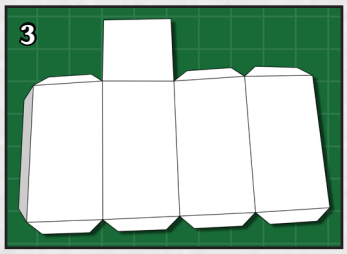

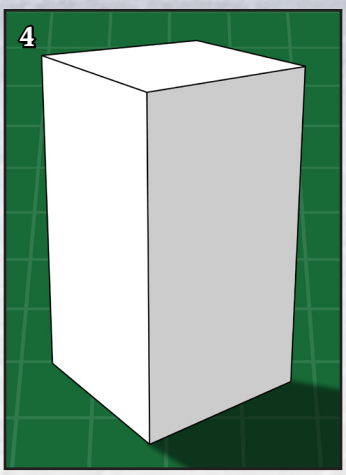

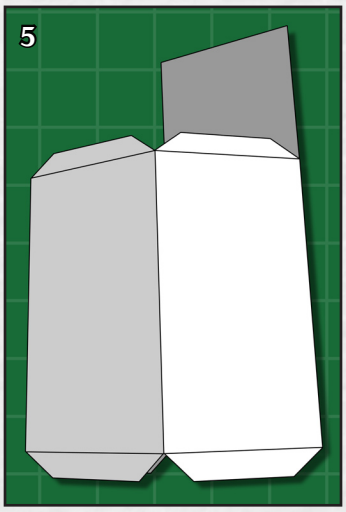

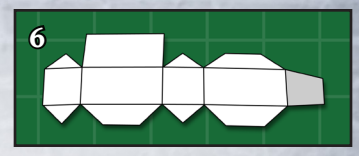

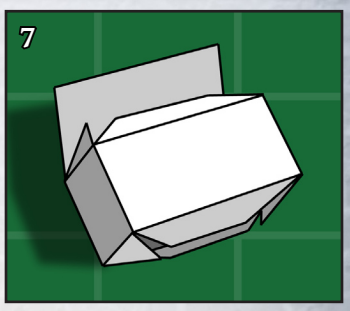

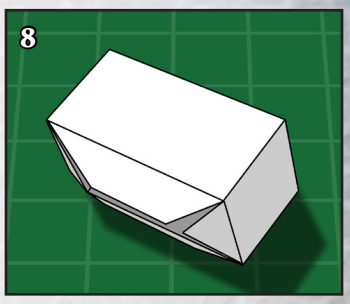

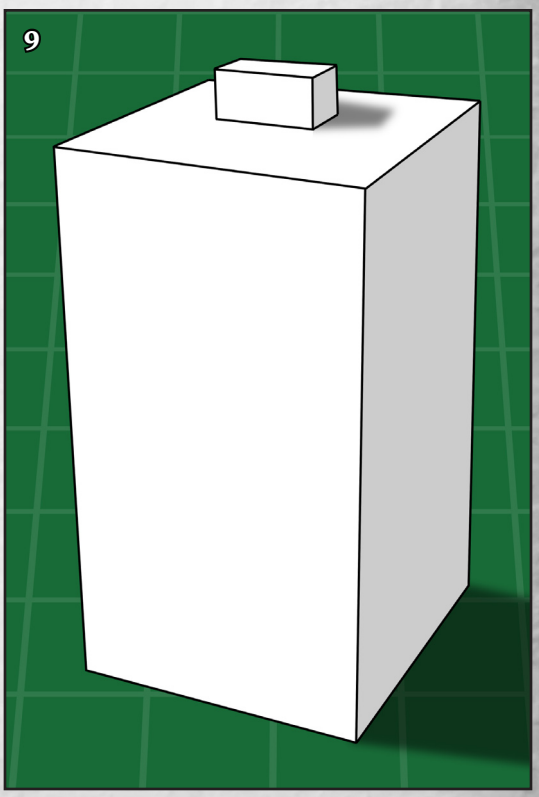

REINFORCERS

These simple inserts will stabilize your model whether you are using the Store Flat or Permanent Build options.

Cut out the two pieces along their outer black lines (1).

Slide the two pieces together using the slots in the middle (2).

Place the reinforcers inside the assembled model (3).

The reinforcers can be easily removed at any time.

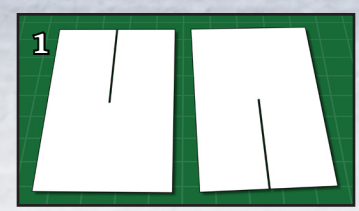

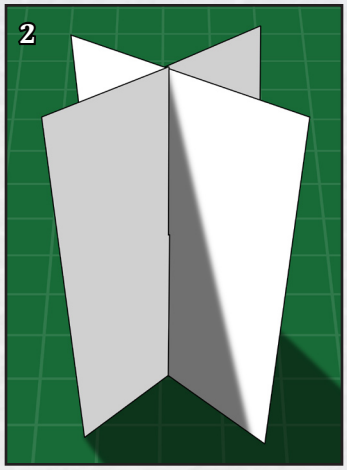

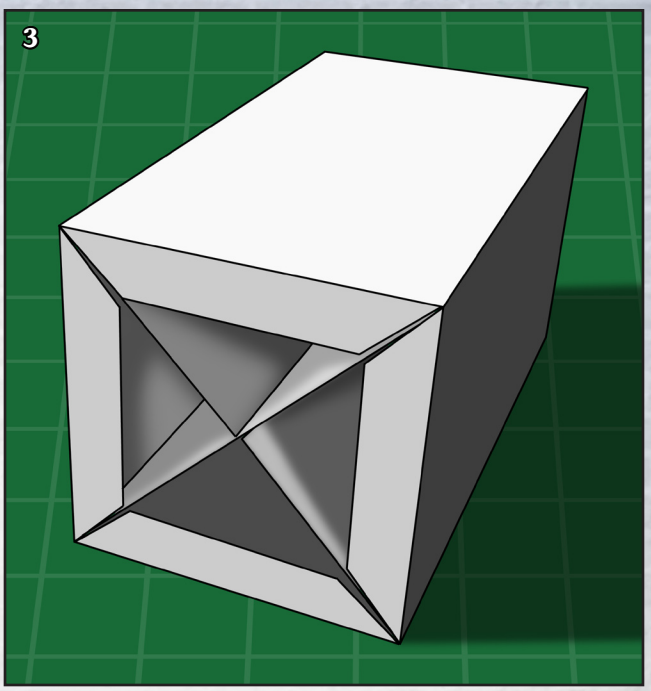

If you like this model kit, DavesGames.net has more than 100 others to choose from.

